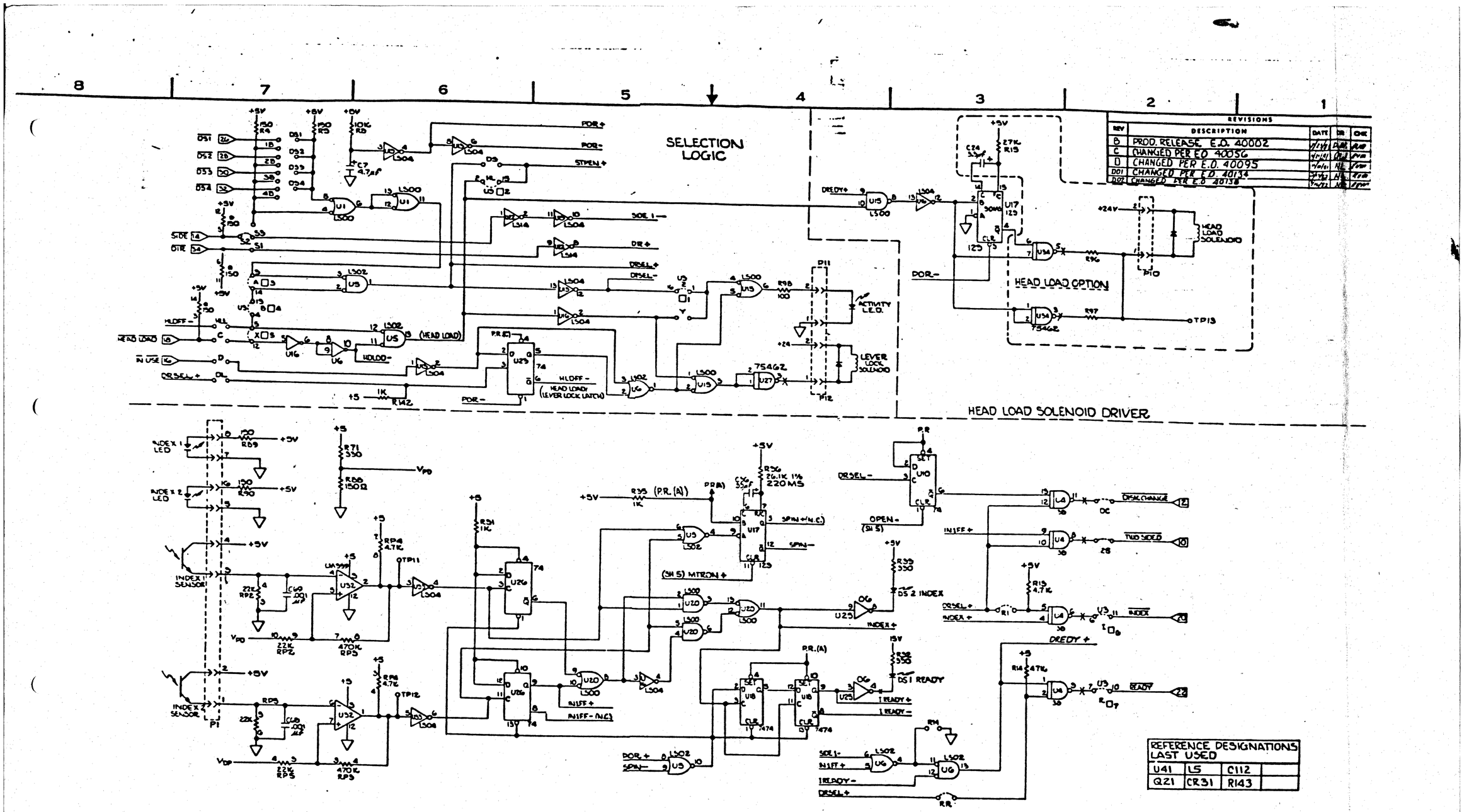

REFERENCE DESIGNATIONS LAST USED			
U41	L5	C112	
Q21	CR31	R143	

- ALL CAPACITORS ARE IN MICROFARADS 50V.
- ALL INDUCTORS ARE MICROHENRY'S ± 10%.
- ALL RESISTORS ARE IN OHMS ¼W, ± 5%.
- -o o- STRAP OPTION.
- ⊓⊔ - STRAP OPTION LOCATED IN SHUNT U5.
- * - RESISTOR LOCATED IN RESISTOR PACK RP1.
- ▷ - ON P13 UNLESS OTHERWISE SPECIFIED.
- -o o- STRAP PRE ETCH ON CIRCUIT BOARD.

APPLICABLE P.C. BOARD REV. LEVEL	210060-000 REV. D
APPLICABLE ASSY REV LEVEL	210094-000 REV. C

Tandon CORPORATION

TITLE: MODEL 848 DISKETTE DRIVE ELECTRONICS.

DWG NO. 210092-00C

NEXT ASSY | FIRST USE
APPLICATION

6

E | SEE SH 1

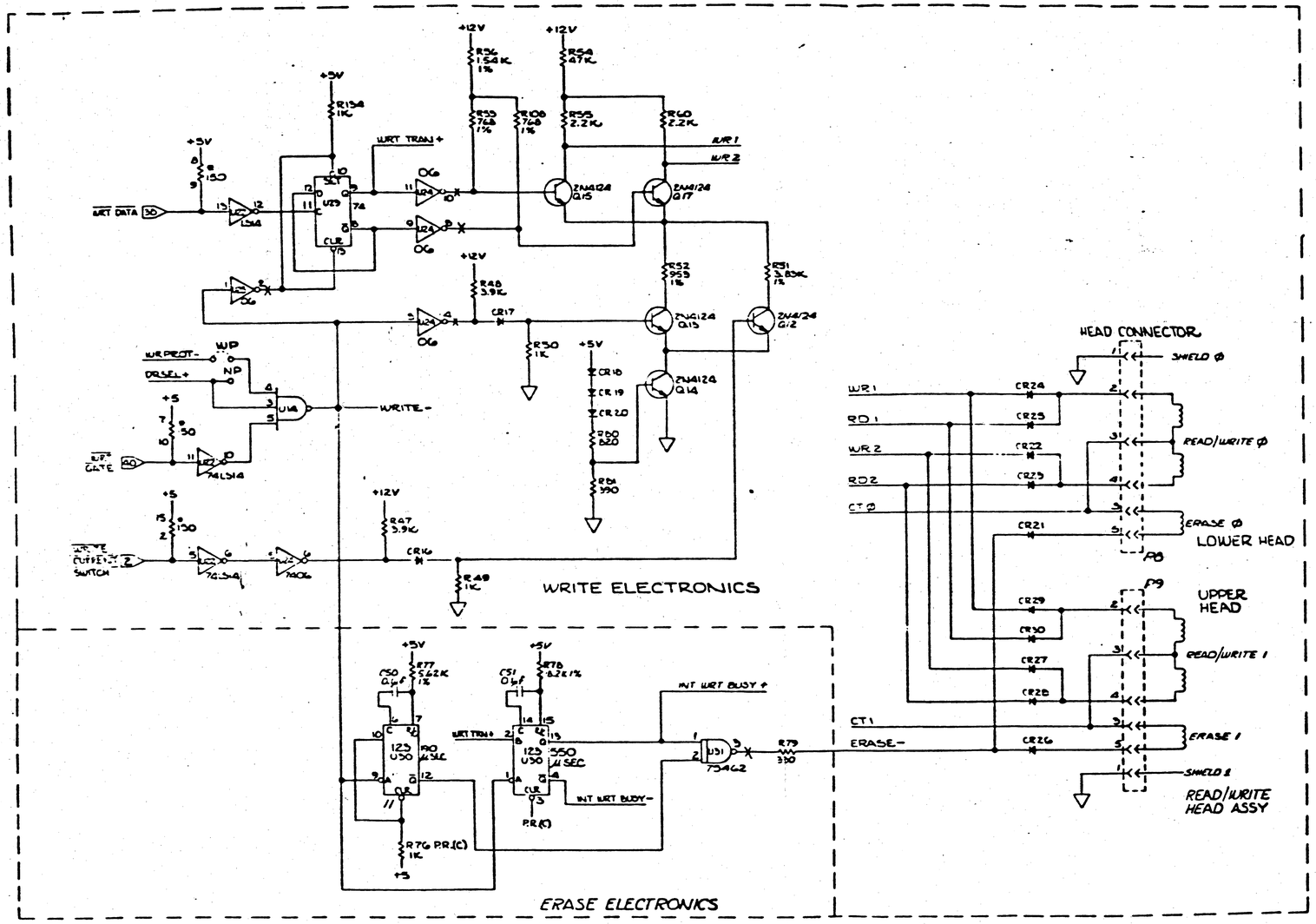

* - RESISTOR LOCATED IN RESISTOR PACK RP1

SIGNATURES	DATE		
DR. WILTSHIRE	7/21/81		
CHK. RVM			
ENG. RVM			
SUPV. RVM			
PROD SUPV. R. Mulvey	7/23/81		
UNLESS OTHERWISE SPECIFIED DIMENSIONS ARE IN INCHES		TITLE MODEL DRIVE E	
TOLERANCES: .XX ± .XXX ± ANGLES ±	MODULAR ± VIP ✓		
BREAK ALL SHARP CORNERS			
APPROX. .040			
FINISH:	MATL.	SIZE	SCALE NONE
NEXT ASSY	FIRST USE		
APPLICATION			

REV	DESCRIPTION
E	SEL SH 1

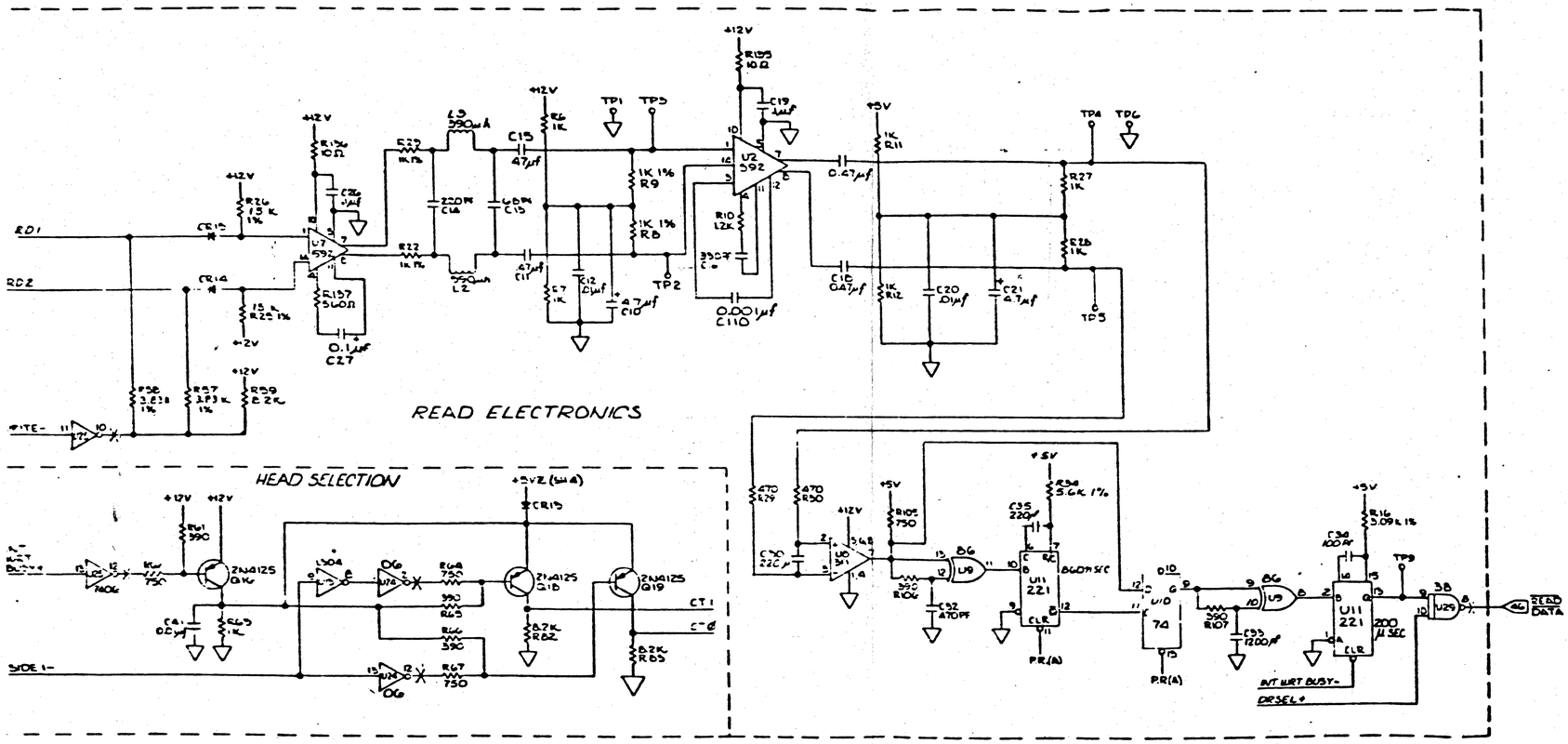

SIGNATURES	DATE
WILTSHIRE, D.	
CHK RVM	
DES RVM	
SHOP RVM	
PROJ ENGR R. MALLAN	7/7/82

Tand

TITLE MODEL 84 DRIVE ELECT

UNLESS OTHERWISE SPECIFIED DIMENSIONS ARE IN INCHES

TOLERANCES: .XX ± .XXX ± ANGULAR ± 1/2°

BREAK ALL SHARP CORNERS APPROX .010

FINISH

MATL

NEXT ASSY | FIRST USE

APPLICATION

SIZE D | CODE IDENT NO | DWG NO 210

SCALE ~ | DO NOT S

7 6 5 4 3 2

12

REVISIONS				
REV	DESCRIPTION	DATE	DR	CHK	AP
E	SEE SHEET 1				

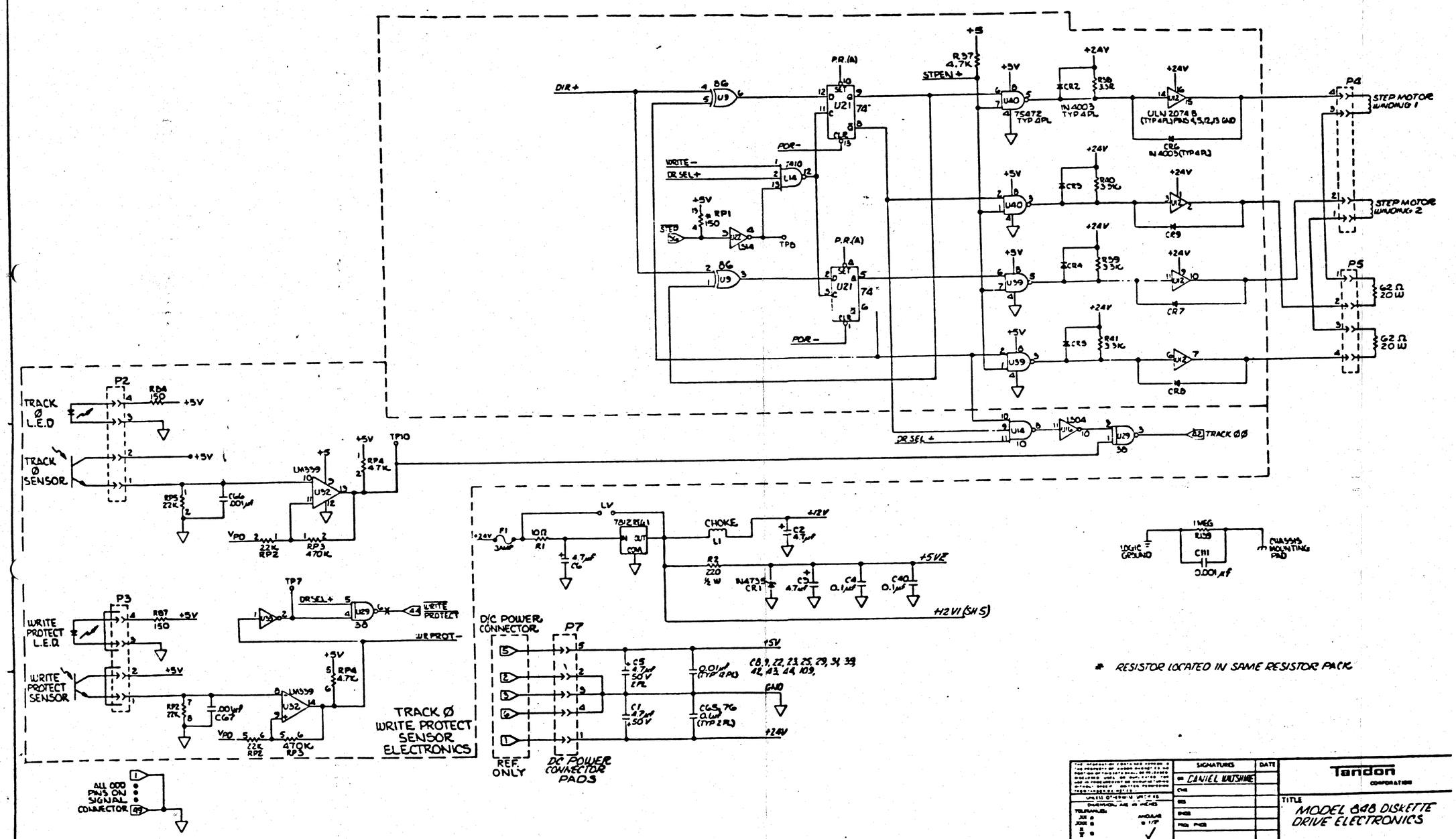

SIGNATURES	DATE
DR DANIEL WATSHME	
CHK	
ENG	
ENGR	
PROJ ENGR	

Tandon CORPORATION

TITLE MODEL 848 DISKETTE DRIVE ELECTRONICS

NEXT ASSY | FIRST USE | APPLICATION

FINISH | MATL | SIZE | CODE IDENT NO | DWG NO 210092-000 | SCALE | DO NOT SCALE DWG | SHEET 4 OF 9

REV	DESCRIPTION	DATE	DR	CHK	APP
F	SEE SHEET 1				

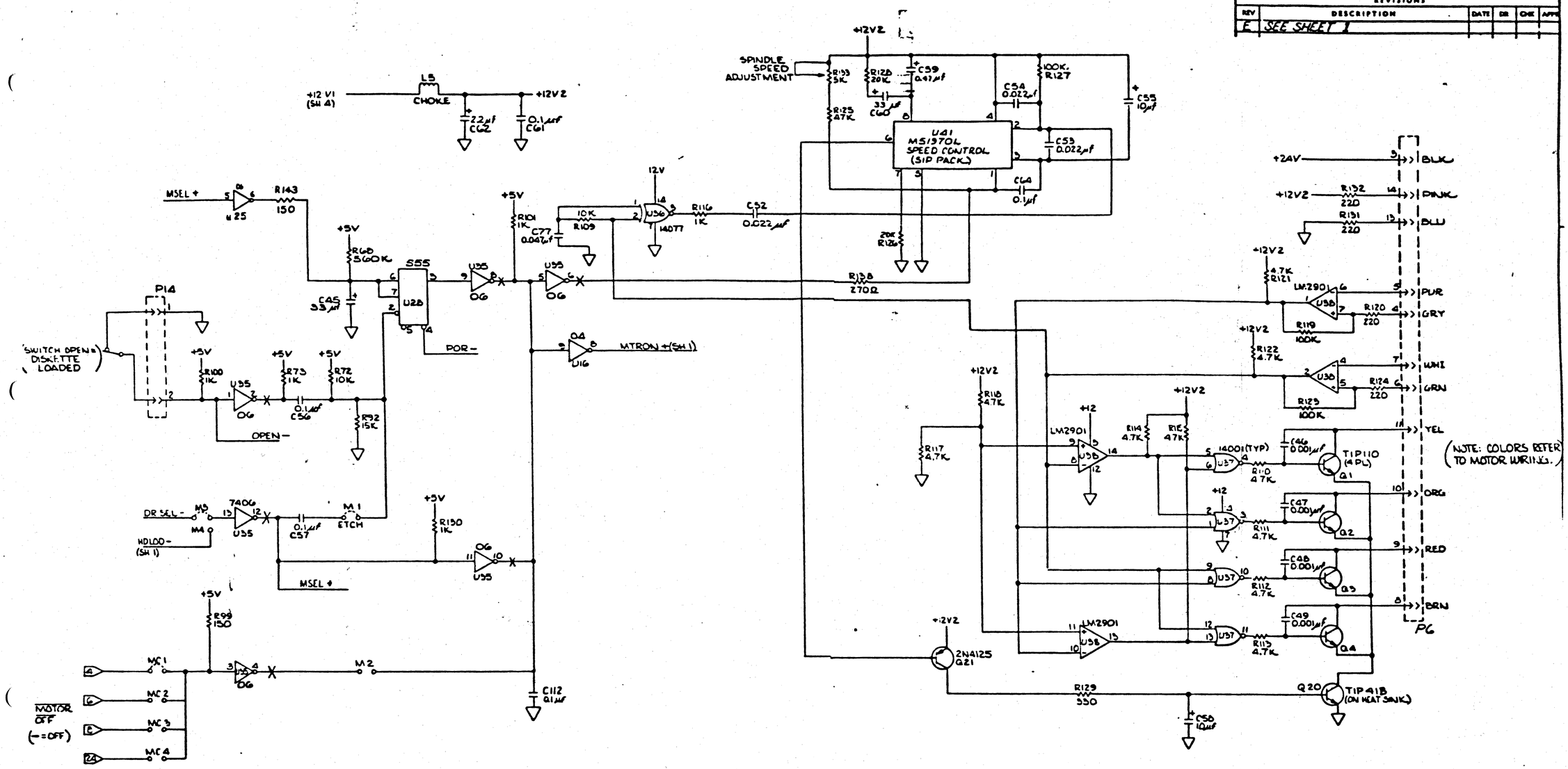

BRUSHLESS DC SPINDLE MOTOR CONTROL

NEXT ASSY	FIRST USE		
APPLICATION			

THE INFORMATION CONTAINED HEREIN IS THE PROPERTY OF TANDON CORPORATION AND SHALL BE REPRODUCED OR COPIED OR USED AS THE BASIS FOR THE MANUFACTURE OR SALE OF APPARATUS WITHOUT WRITTEN PERMISSION OF TANDON CORPORATION.

UNLESS OTHERWISE SPECIFIED DIMENSIONS ARE IN INCHES
TOLERANCES:
.XX ±
.XXX ±
∠ ±
ANGULAR ± 1/2°
BREAK ALL SHARP CORNERS
APPROX .040

FINISH:

MATL:

	SIGNATURE	DATE
DRAWN		
CHK		
ENGR		
PROJ ENGR		

Tandon CORPORATION

TITLE MODEL 848 DISKETTE DRIVE ELECTRONICS

SIZE D | CODE IDENT NO | DWG NO 210092-000 | REV D

SCALE — | DO NOT SCALE DWG | SHEET 5 OF 5

10

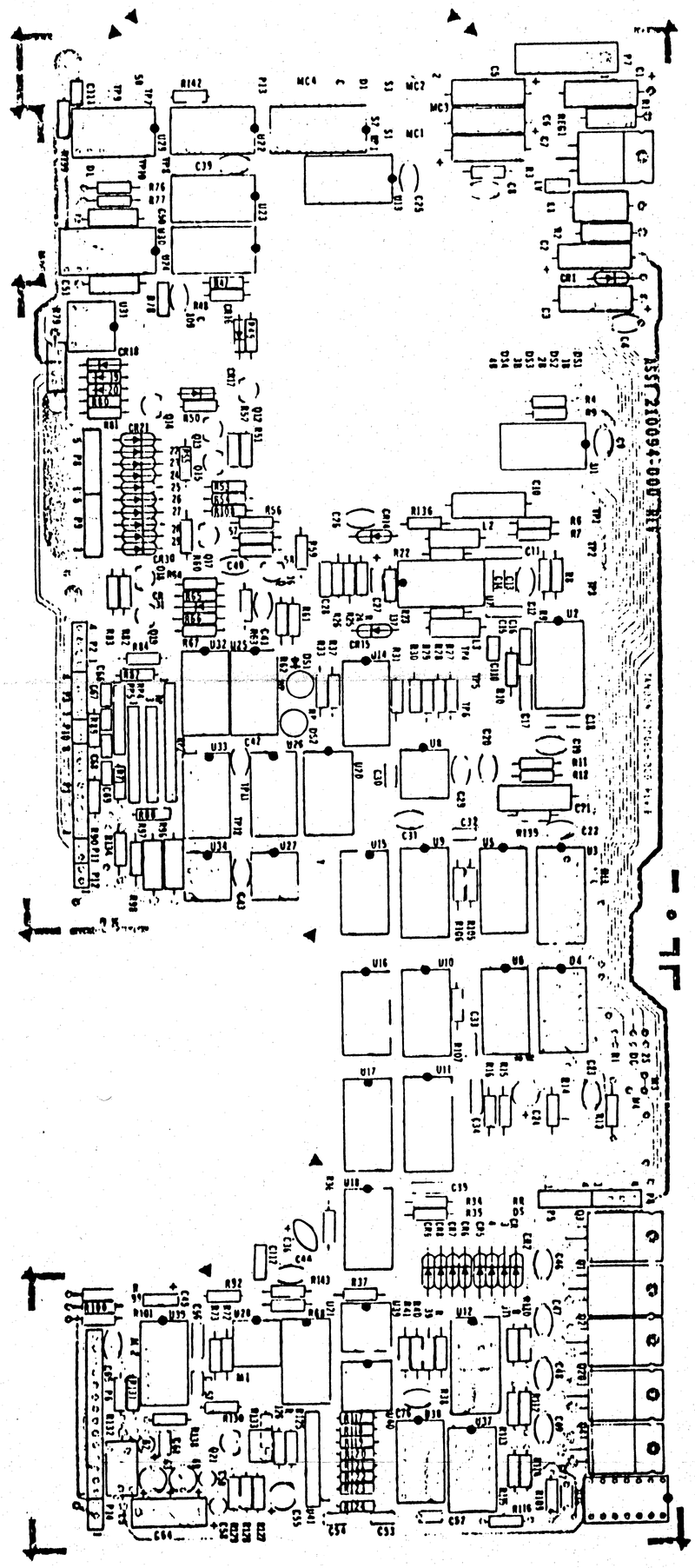

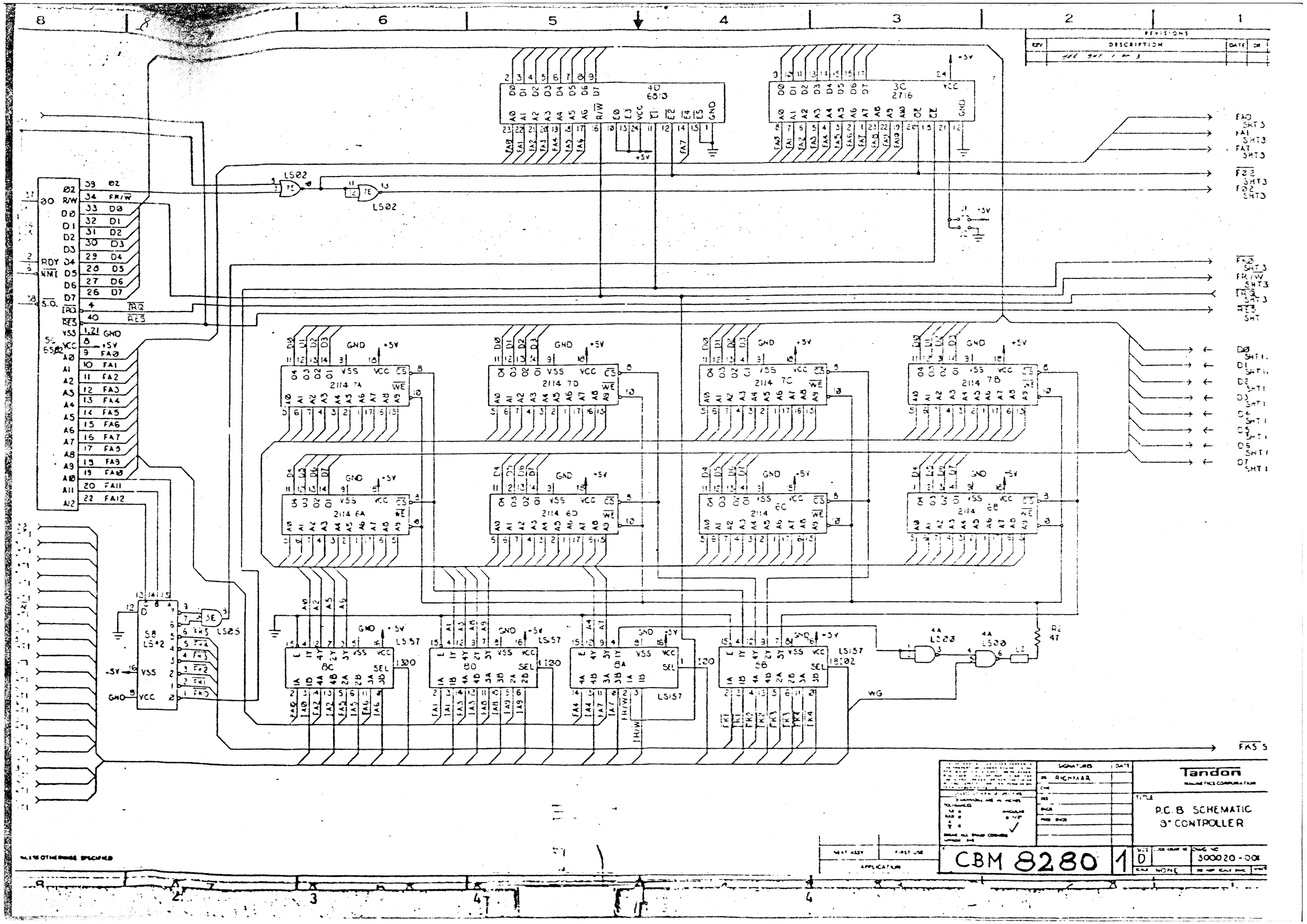
REVISIONS
REV
DESCRIPTION
DATE
DR
4D
6513
3C
2716
LS02
2114 7A
2114 7D
2114 7C
2114 7B
2114 6A
2114 6D
2114 6C
2114 6B
LS57
LS20
LS25
LS42
FA0 SHT3
FA1 SHT3
FA7 SHT3
F22 SHT3
F02 SHT3
FR/W SHT3
D0 SHT1
D1 SHT1
D2 SHT1
D3 SHT1
D4 SHT1
D5 SHT1
D6 SHT1
D7 SHT1
FKS S
WG
Tandon
P.C.B SCHEMATIC
8" CONTROLLER
CBM 8280
1
D
300020-001
NONE
NEXT ASSY
FIRST USE
APPLICATION
UNLESS OTHERWISE SPECIFIED

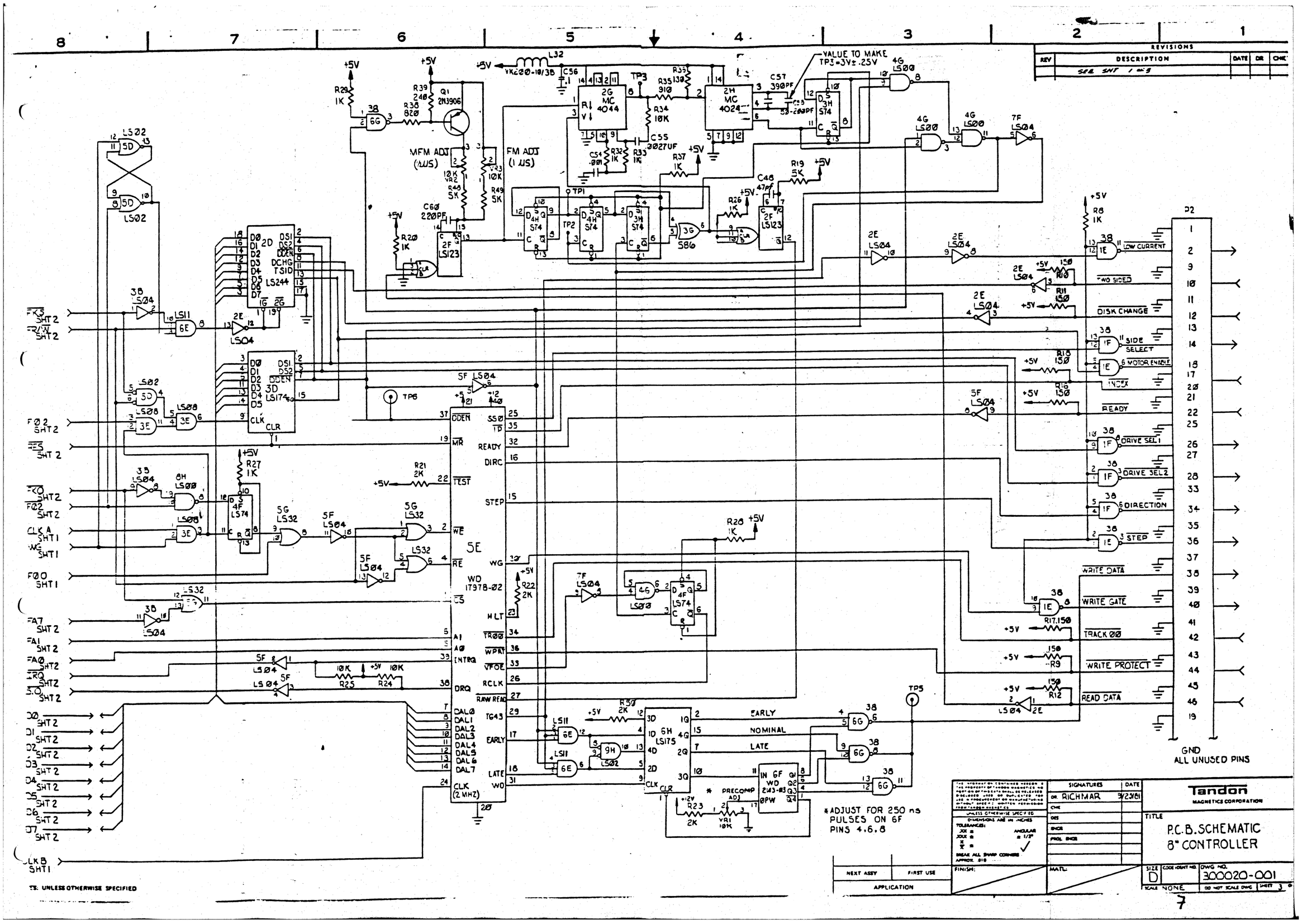
REVISIONS
REV
DESCRIPTION
DATE
DR
CHK
SEE SHT 1 ECS
VALUE TO MAKE TP3=3V±.25V
MFM ADJ (2US)
FM ADJ (1 US)
WD 1797B-02
5E
LOW CURRENT
TWO SIDED
DISK CHANGE
SIDE SELECT
MOTOR ENABLE
INDEX
READY
DRIVE SEL 1
DRIVE SEL 2
DIRECTION
STEP
WRITE DATA
WRITE GATE
TRACK 00
WRITE PROTECT
READ DATA
EARLY
NOMINAL
LATE
GND
ALL UNUSED PINS
*ADJUST FOR 250 ns PULSES ON 6F PINS 4,6,8
Tandon
MAGNETICS CORPORATION
TITLE
P.C.B. SCHEMATIC
8" CONTROLLER
DR. RICHMAR
9/23/81
DWG NO.
300020-001
SIZE D
SCALE NONE
SHEET 3
NEXT ASSY
FIRST USE
APPLICATION
FINISH:
MATL:
UNLESS OTHERWISE SPECIFIED
DIMENSIONS ARE IN INCHES
BREAK ALL SHARP CORNERS
APPROX. 8"

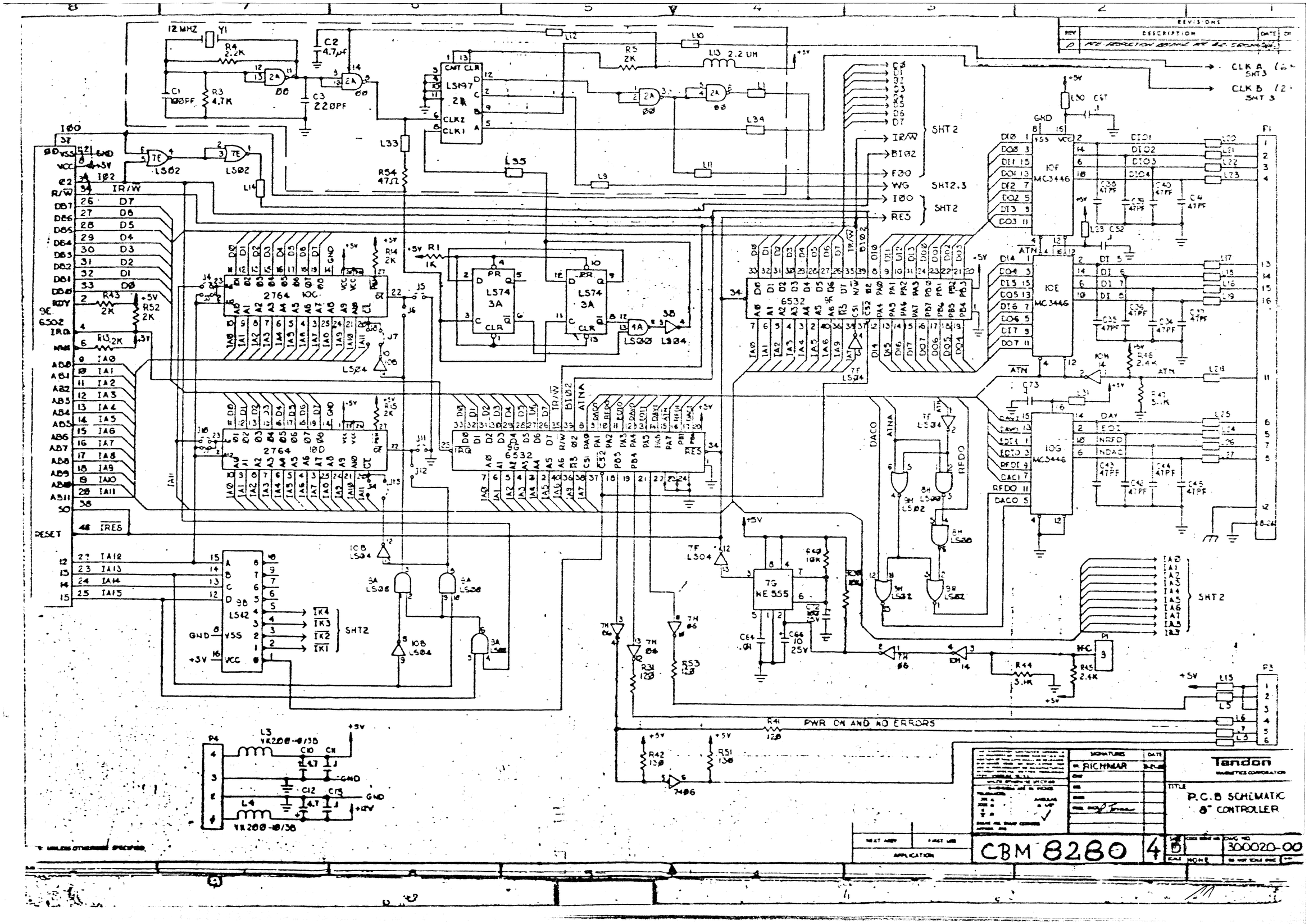
12 MHZ
Y1
R4 2.2K
C2 4.7µf
C1 100PF
R3 4.7K
C3 220PF
LS197
2X
CNT CLR
CLK2
CLK1
R5 2K
L10
L3 2.2 UH
L33
R54 47Ω
L35
L9
L11
L34
L14
LS02
IR/W
D7
D6
D5
D4
D3
D2
D1
D0
R43 2K
R52 2K
R13 2K
6502
IRQ
NMI
RDY
RESET
IRES
IA0
IA1
IA2
IA3
IA4
IA5
IA6
IA7
IA8
IA9
IA10
IA11
IA12
IA13
IA14
IA15
2764 10C
2764 10D
R14 2K
R15 2K
R1 1K
LS74 3A
LS00
LS04
6532
ATNA
DACO
RFDO
IRQ
RES
LS42
IK4
IK3
IK2
IK1
SHT2
SHT2.3
IB02
FB0
WG
IB0
RES
CLK A
CLK B
IOF MC3446
IOE MC3446
IOG MC3446
DI01
DI02
DI03
DI04
DI
DAY
EOI
INRFD
INDAC
ATN
R46 2.4K
R47 5.1K
R49 10K
7G NE 555
C64 .01
C66 10 25V
R31 120
R53 120
R41 120
R42 120
R51 130
7H 06
7F LS04
7H 10H
R44 5.1K
R45 2.4K
P1
P3
P4
L3 VK200-4/3B
L4 VK200-4/3B
C10 4.7
C11
C12 4.7
C13
GND
+12V
PWR ON AND NO ERRORS
REVISIONS
DESCRIPTION
DATE
Tandon
MAGNETICS CORPORATION
RICHNEAR
TITLE
P.C.B SCHEMATIC
8" CONTROLLER
CBM 8280
4
300020-00
APPLICATION
NEXT ASSY
FIRST USE

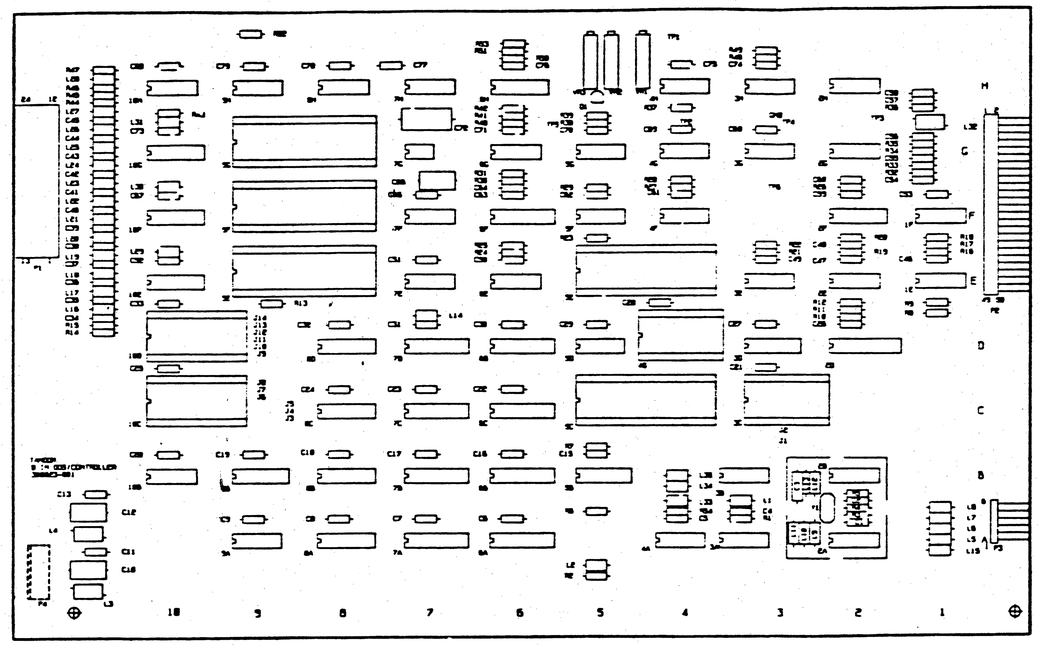

SIGNATURES	DATE
DR M WOMACK	4-9-82
CHK	
DES	
ENGR	
PROJ ENGR	

UNLESS OTHERWISE SPECIFIED
DIMENSIONS ARE IN INCHES
TOLERANCES
.XX ±
.XXX ±
.XXXX ±
ANGULAR ± 1/2°
BREAK ALL SHARP CORNERS
APPROX .010

FINISH:

MATL.

Tandon CORPORATION

TITLE
PCB ASSY
8" DOS CONTROLLER

SIZE	CODE IDENT NO	DWG NO	REV
D		300023-001	A

SCALE 1:1 | DO NOT SCALE DWG | SHEET 1 OF 1

3

REVISIONS				
REV	DESCRIPTION	DATE	BY	CHK
C	PER PRODUCTION CHANGE REQ. E.P. STACK			

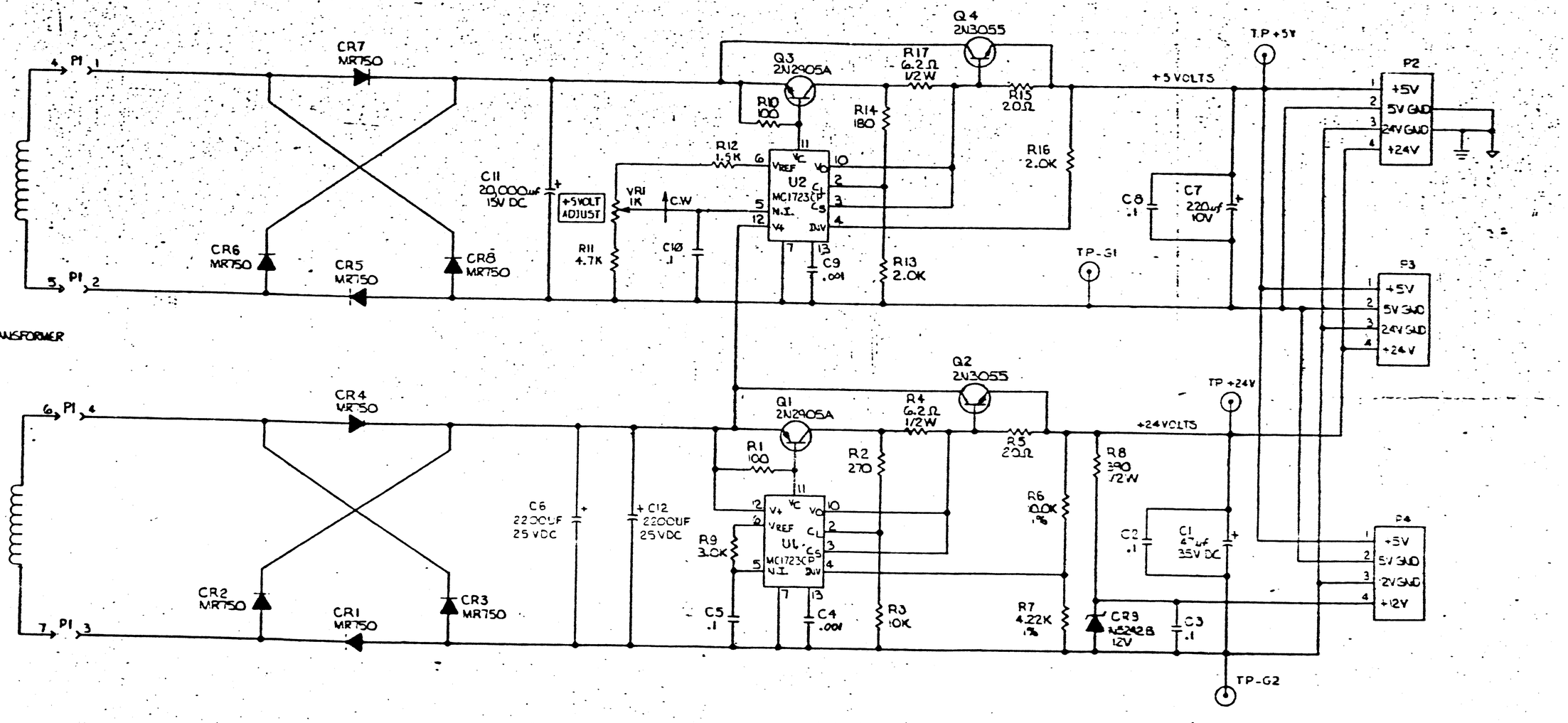

SIGNATURES		DATE
DR. RICHMAR		9-81
CHK		
MFG		
ENGR		
PROJ. MGR.		

Tandon

TITLE: PCB SCHEMATIC POWER SUPPLY 8" CONTROLLER

NEXT ASSY | FINISH | APPLICATION

CBM 8280

3

SIZE D | CODE IDENT NO. | DWG NO. 300025-001

SCALE | NO. | SHEET 1 OF 1

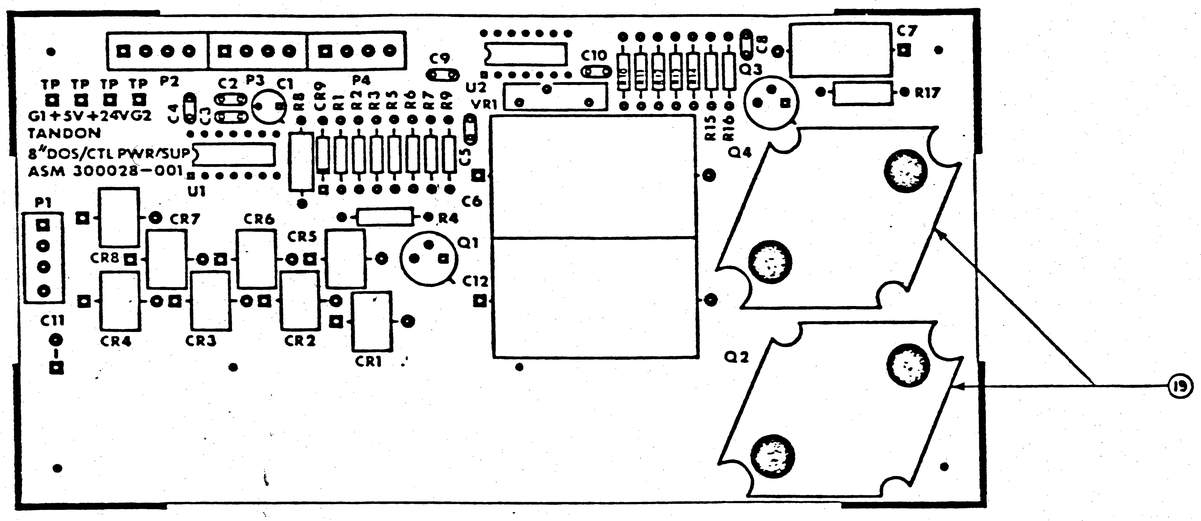

SIGNATURES	DATE
DR RICHMAR	2-82
CHK	
DES	
PROB	
PROJ ENGR	

DIMENSIONS ARE IN INCHES
TOLERANCES:
.XX ±
.XXX ±
± ANGULAR ± 1/2°
BREAK ALL SHARP CORNERS
APPROX .010

FINISH

MATL

NEXT ASSY | FIRST USE
APPLICATION

Tandon
MAGNETICS CORPORATION

TITLE
PCB ASSEMBLY
8" DOS/CONTROLLER
POWER SUPPLY

SIZE D | DWG NO 300028-001
SCALE 1:1 | DO NOT SCALE DWG | SHEET 1 OF

7 6 5 4 3 2 1

2

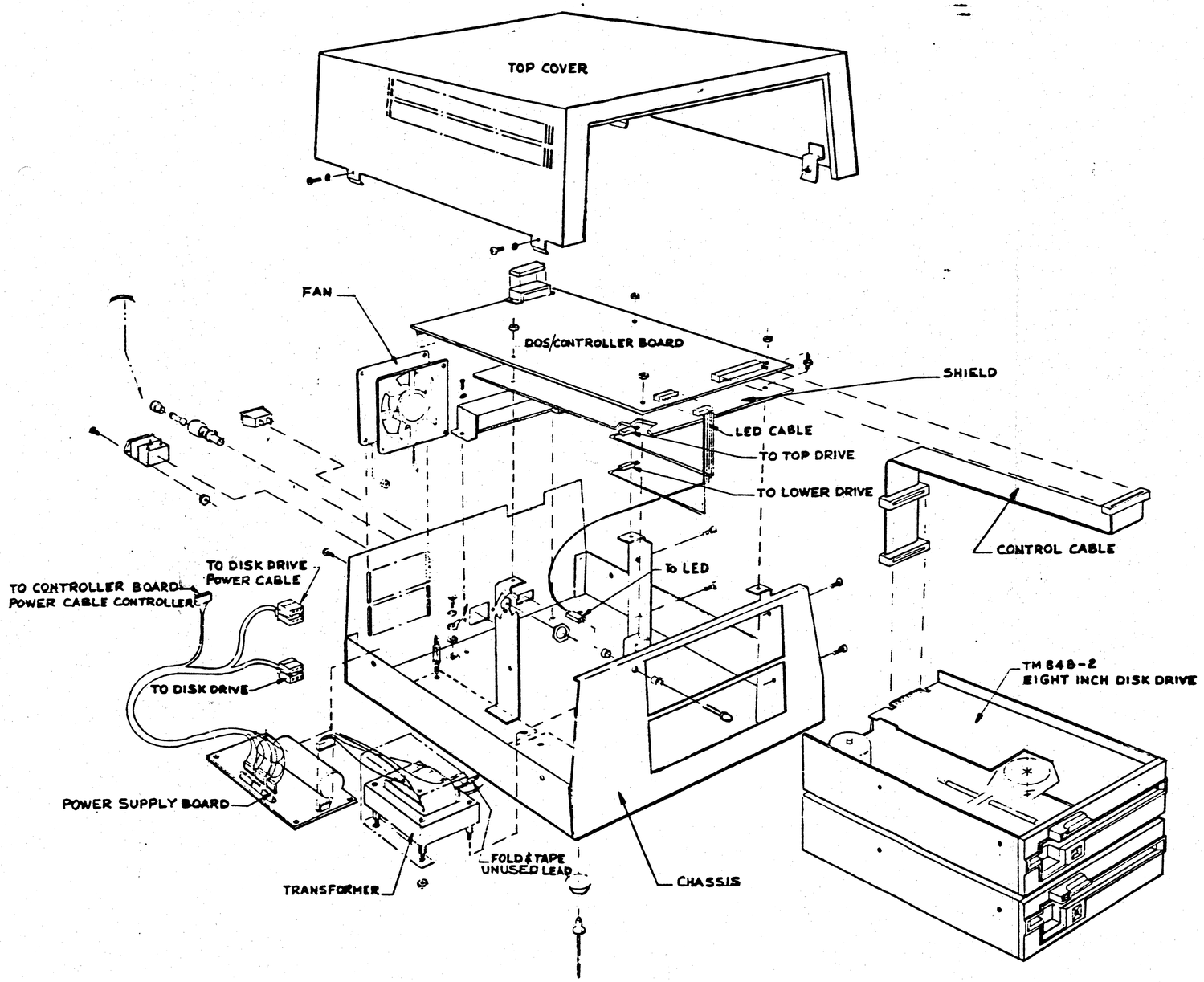

AC POWER WIRE LIST

From	To	Wire
S1	Fan	Black
S2	F1	Red 20 Ga
F2	P3	Red 20 Ga
P2	Gnd Bolt	Green/Yellow 20 Ga
P1	Fan	Black
P1	Transformer	White
S1	Transformer	Red (for High Voltage Operation)
S1	Transformer	Black (for Low Voltage Operation)

	Signatures	Date
DR.		
CHK		
APR		
CHECK		
FINAL		

Tandon Magnetics Corporation

TITLE 8" FLOPPY SUBSYSTEM

CBM 8280

Size D — Dwg. No. 300546-00x

1